CAST FENDER TIP
N717 Honda VT1100 C2 ACE
INSTALLATION INSTRUCTION and TEMPLATE

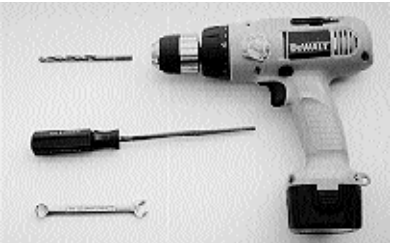

TOOLS REQUIRED:

Flexible Measuring Tape Power
Grease Pencil or Crayon
Cellophane Tape
Block of wood that fits between Fender & Tire,
Template located on reverse side of this sheet.

Power Drill with 3/16" Drill Bit
Round File
11/32 or 9mm Wrench

PREPARATION:

The molds for these quality cast fender tips are made directly from production fenders. This assures you the best fit possible. Crafted to "fit the fender" also means the shape of the fender tip will not always be symmetrical. The fender is not a critical inspection dimension for the motorcycle manufacturer. Fenders from the same model motorcycle will vary. Examine the template(s) included with this instruction. On the template, please check, and re-measure:

A. The measurement provided from the center line to the center of the drill hole. Due to sizing errors caused by paper and the printing process, you may need to re-mark the drill hole measurement ON THE PAPER TEMPLATE BEFORE PROCEEDING with installation.

Installation continued on reverse side.

©1998 National Cycle, Inc. PO Box 158, Maywood, IL 60153-0158 USA
708-343-0400 / Fax: 708-343-0625 / www.nationalcycle.com / e mail: info@nationalcycle.com

10-110617 05/98

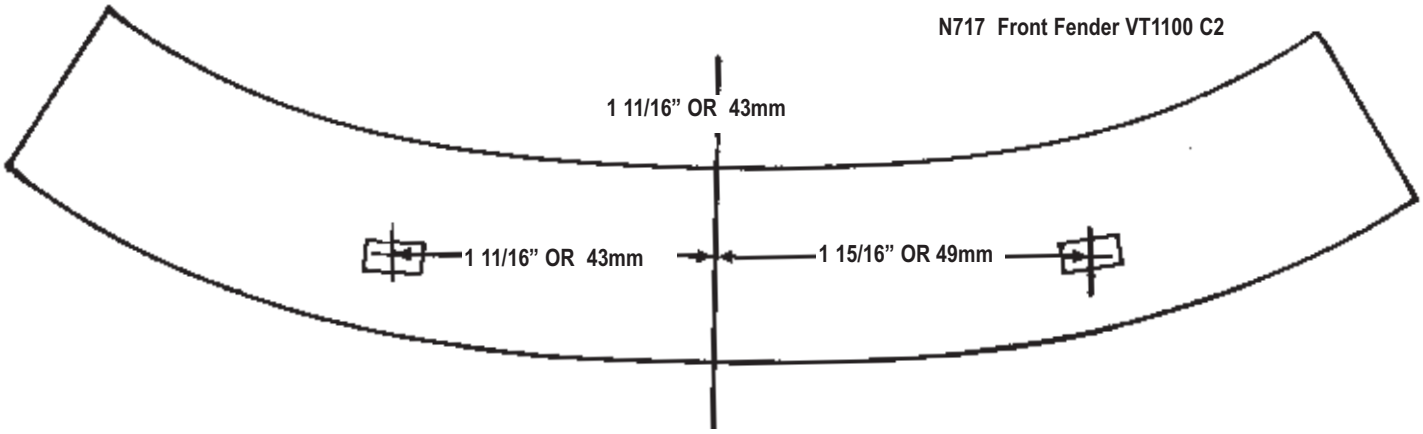

USE FRONT EDGE AS PLACEMENT GUIDE

INSTALLATION

1. Find Center of the Fender

To find center of fender, place a measuring tape across fender on area covered by Fender Tip. Use easy to find points for the start and end of this measurement. Divide this measurement by two, and mark the corresponding spot on the fender.

2. Place Template

A. Align the **LOWER EDGE OF TEMPLATE** to be flush with the **LOWER EDGE OF THE FENDER,** matching center line of template with marked center point. Secure the template onto the fender with cellophane tape.

B. Do a visual alignment check by placing fender tip studs over drill marks.

C. Place block of wood between the fender and the tire to avoid tire damage. Drill through the fender at the hole locations on the template. Remove wood block and template. File the outside and inside edges of the hole to form a slot.

3. Install Fender Tip

A. Position Fender Tip at edge of fender and insert mounting studs through holes in fender. Place a washer onto the stud and secure with a nut. Repeat for other side.

B. Carefully tighten nuts with wrench. The nuts should be tight enough to avoid rattles.

C. Check the tightness of the nuts after about ten miles of riding.

CARE AND MAINTENANCE: Clean and polish with a chrome cleaner/polish. Check tightness of the nuts regularly.