Barkbusters

www.barkbusters.net

FITTING INSTRUCTIONS for...

BMW F650GS - twin cylinder ('08-'12)
BMW F800GS ('08-'12)
BMW R1200GS (up to '12)
BMW R1200GS Adventure (up to '13)
BMW HP2 Megamoto ('07-'09)
TRIUMPH Tiger 1050 Sport ('13 on)

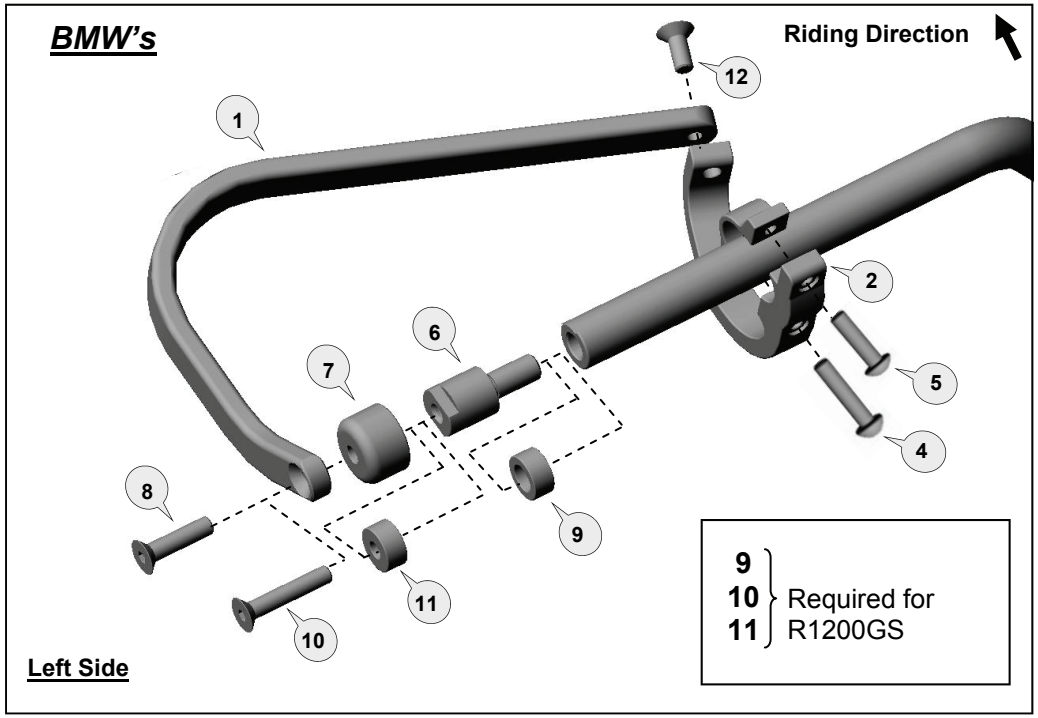

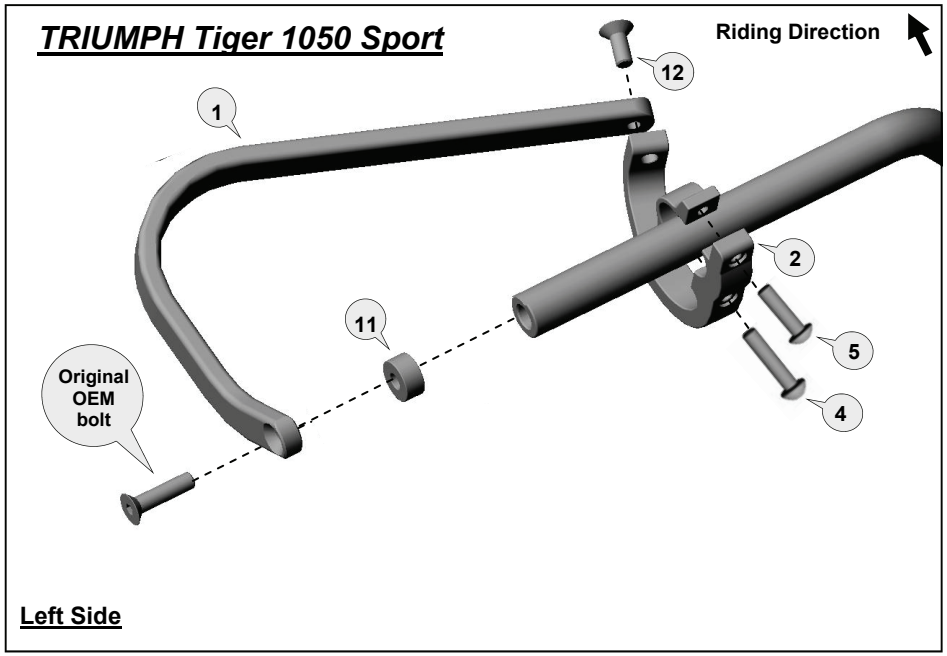

Fitting Procedure shown for the LEFT side (repeat for right side with applicable parts)

Loosely assemble clamp to the handlebar with applicable parts (see diagram for your model motorbike).
Attach the handguard backbone with applicable parts to the handlebar end and also to the clamp.

Note: The preferred backbone position is horizontal when viewed from the side.
Tighten all bolts in the following order (8) or (10) or (Original OEM bolt on Tiger), then (12), then (4 and 5).
Use recommended torque specifications over page.

Fitting Tips:

It may be necessary to move the brake and clutch controls toward the handlebar end by a few millimetres to achieve a correct fit. If the clamp frame (2 & 3) makes contact with the tank at full steering lock, it may be necessary to rotate the handlebar up (forward) slightly to allow adequate clearance.

Bar Side View

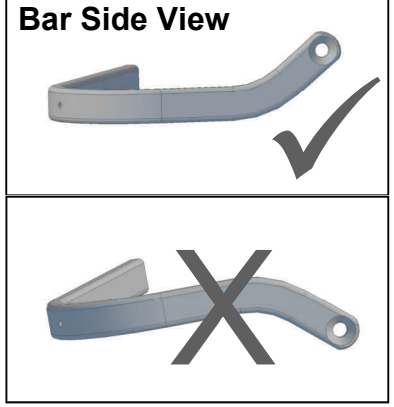

Personalise Your Protection
Guard options sold separately

JET	JET-003
VPS	VPS-003
Storm	STM-003
CARBON	BCF-003

RIDEWORX

Phone: +61 (0)2 4271 8244
Email: info@barkbusters.net

1 Aluminium Bar

PN: BAR-V-036
Pcs. 2 (L & R)

2 Clamp Frame & Saddle (left)

PN: CFS-ADV-L
Pcs. 1 set

3 Clamp Frame & Saddle (right)

PN: CFS-ADV-R
Pcs. 1 set

4 Button Head Bolt 30mm

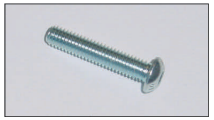

PN: M6x30BHCSZP
Pcs. 2

5 Button Head Bolt 20mm

PN: M6x20BHCSZP
Pcs. 2

6 Steel Bar End

PN: BESF
Pcs. 2

7 Bar End Cap

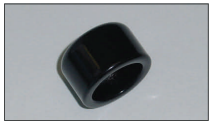

PN: BEC2
Pcs. 2

8 Flat Head Bolt 30mm

PN: M8x30FHCSZP
Pcs. 2

9 Spacer 12.2mm to 21mm

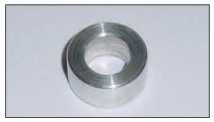

PN: SP12-21
Pcs. 2

10 Flat Head Bolt 40mm

PN: M8x40FHCSZP
Pcs. 2

11 Spacer 10mm

PN: BSSRT10
Pcs. 2

12 Flat Head Bolt 20mm

PN: M8X20FHCSZP
Pcs. 2

Recommended Torque Settings	
M6	10 Nm (7.4 lbf ft)
M8	20 Nm (14.8 lbf ft)
M12 (item 6)	21Nm (15.5 lbf ft)

CAUTION:
Installation of the handguard is safety-relevant work and can be complicated. We recommend the installation be performed by a motorcycle service technician. Rideworx accepts no liability for damages caused by improper mounting. All screws, bolts and nuts, including all replacement hardware provided by Rideworx, should be tightened to the torque specified in the table. After the first 50km of riding check all screws, bolts and nuts are tightened to the correct torque. We recommend a medium strength liquid thread lock product on all fasteners.

WARNING:
Check operation of all handlebar controls, specifically the throttle, front brake, kill switch and clutch to ensure they are operating correctly and are in accordance with the OEM specifications. Do not ride the motorcycle if any controls are not operating correctly or if rear view mirror vision is obscured. Check periodically that all bolts are tight.

Phone: +61 (0)2 4271 8244
Email: info@barkbusters.net
Web: **www.barkbusters.net**

Disclaimer:
A failure to follow these fitting instructions could cause serious injury, death or property damage. These handguards are intended solely for use with motorcycles/ATV/snowmobiles/ scooters that have not been modified. They are not designed to prevent injury or death while riding or in an accident or crash. The user must ensure that all controls are free of the handguards every time that they ride. By installing and/or using this product you acknowledge that you accept these terms and have followed the fitting instructions.

Barkbusters

www.barkbusters.net

Esempio di aggancio delle plastiche VPS

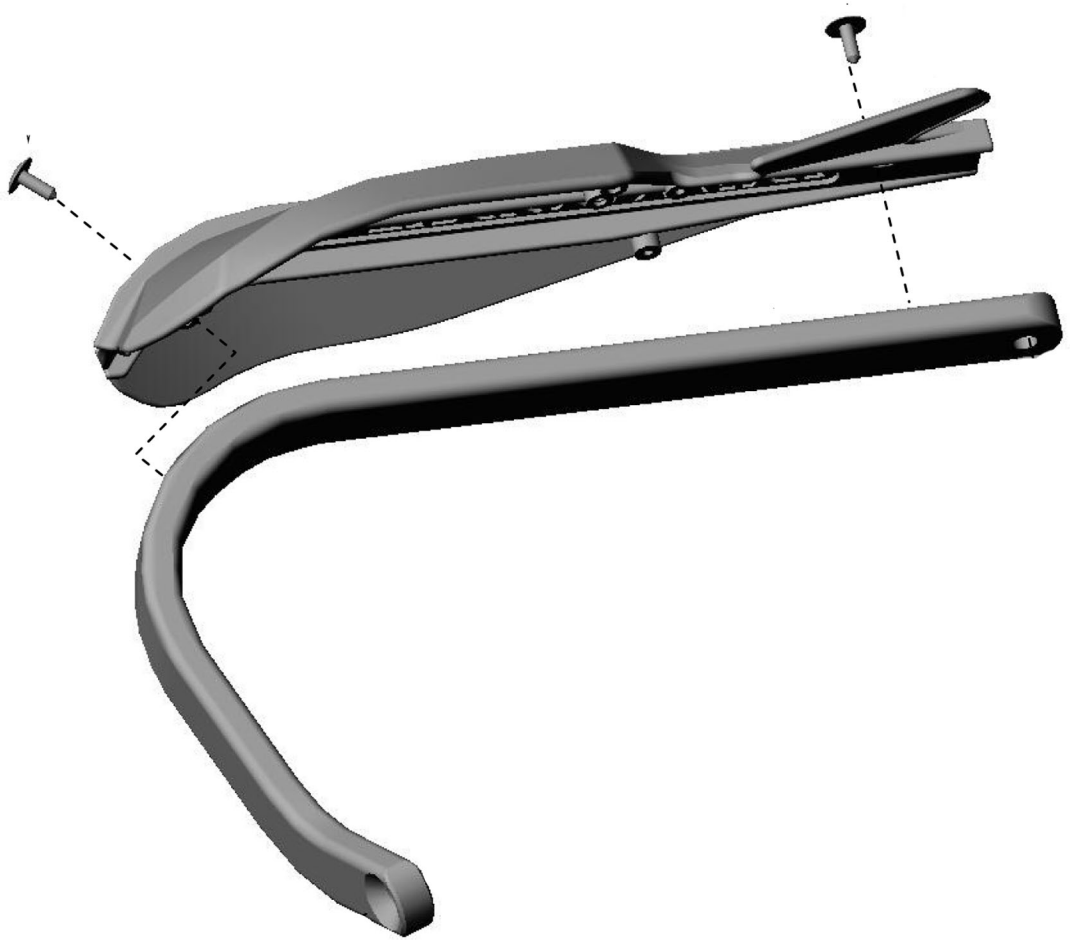

RIDEWORX

Phone: +61 (0)2 4271 8244
Email: info@barkbusters.net